Multi-Tube Vortex Mixers

Powerful Hands-Free Vortex Mixer for Efficient High-Throughput Mixing

OHAUS Multi-Tube Vortexers are ideal for hands-free, high-throughput sample processing. Interchangeable foam racks for vortexing tubes from 10 to 29 mm in diameter are available. Strong suction cup feet reduce motion and prevent sliding on the work surface for safe operation in the lab. Digital models offer exact speed control for applications that demand repeatable results. Non-digital variable speed models are an economical alternative.

Unique Features:

- Easily process up to 50 samples at one time - the Multi-Tube Vortex Mixer can be customized for your application with six different tube racks and a post- extension kit.
- The Multi-Tube Vortex Mixers feature either an easy to clean one-piece stainless steel housing that is perfect for clean rooms or a painted steel version for a more economical option.
- For challenging samples, enhance vortex action and create a more vigorous mix with the programmable pulse mode on the digital models. Adjust the pulse-on/pulse-off time interval to customize operation.

Multi-Tube Vortex Mixers

Model	VXMTAL	VXMTALB	VXMTDG	VXMTDGB
Housing	Stainless Steel / One-Piece	Painted Steel / Two-Piece	Stainless Steel / One-Piece	Painted Steel / Two-Piece
Control	Analog		Digital	
Speed Range	1200 rpm – 2400 rpm		500 rpm – 2500 rpm	
Orbit	3.6 mm			
Duty Rating	Continuous			
Capacity	4.5 kg			
Working Environment	4 °C – 40 °C, 20% – 85% Relative humidity, non-condensing			
Power	230V, 1A, 50/60Hz			
Power Consumption	100 W			
Tray Dimensions (L × W)	184 × 311 mm			
Dimensions (W × L × H)	384 × 241 × 406 mm			
Net Weight	20.3 kg			

Other Standard Features and Equipment

Detachable 3-wire cord and plug (included), foam rack for (50) 12 mm diameter tubes (included), interchangeable foam racks for vortexing tubes from 10–29 mm in diameter (ordered separately). VXMTAL and VXMTDG feature a one piece stainless steel housing, and VXMTALB and VXMTDGB feature an economical painted steel housing.

Compliance

- **Product Safety:** EN 61010-1, EN 61010-2-051
- **Electromagnetic Compatibility:** EN 61326-1 Class A, Industrial Environments
- **Compliance Marks:** CE; RCM; TÜV SÜD

Accessories

10 mm Tube Rack 50 Tube Capacity 30400238
12 mm Tube Rack 50 Tube Capacity 30400239
13 mm Tube Rack 50 Tube Capacity 30400240
16 mm Tube Rack 50 Tube Capacity 30400241
50 mL Tube Rack 15 Tube Capacity 30400242
25 mm Tube Rack 28 Tube Capacity 30400243
Post Extension Kit* 30400244
Tray Pad Set - Top And Bottom 30400245

*Without post extension kit - tubes from 5.1 cm - 10.2 cm height
With post extension kit - tubes up to 25.4 cm height

Dimensions

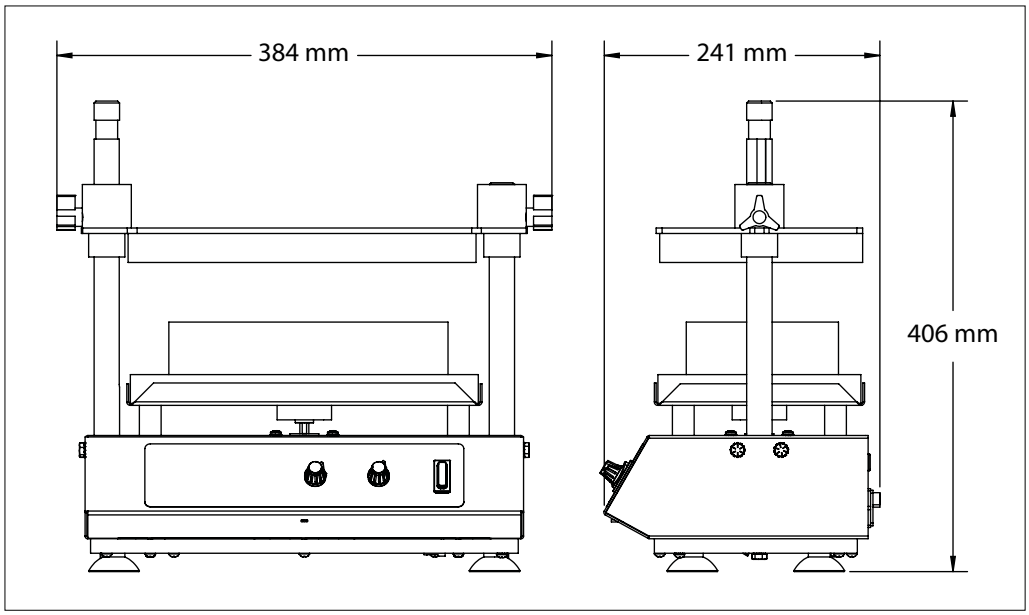

80775589_F 20250716 © Copyright OHAUS Corporation

OHAUS Europe GmbH

e-mail: ssc@ohaus.com
Tel: 0041 22 567 53 19
e-mail: tsc@ohaus.com
Tel: 0041 22 567 53 20

www.ohaus.com

The management system governing the manufacture of this product is ISO 9001:2015 certified.

OHAUS®